REVISION HISTORY			
REV.	DESCRIPTION	DATE	DRAWN BY
1	ORIGINAL PRINT	6/18/2019	N. LAWRENCE
2	UPDATED MATERIAL AND FINISH	5/28/2021	N. MASSOUDA
3	UPDATED HEX BORE POSITION TOLERANCES	1/13/2022	N. LAWRENCE

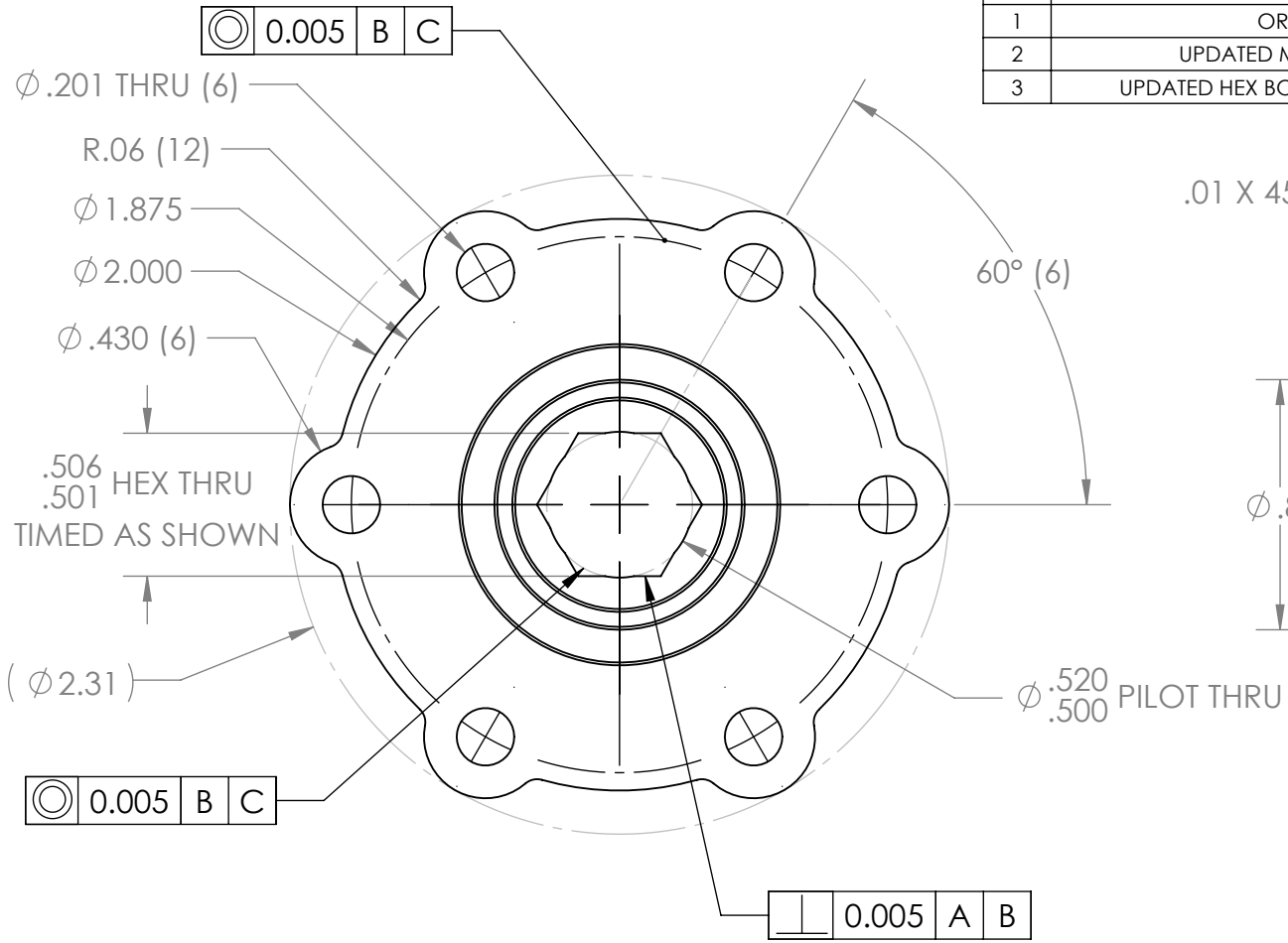

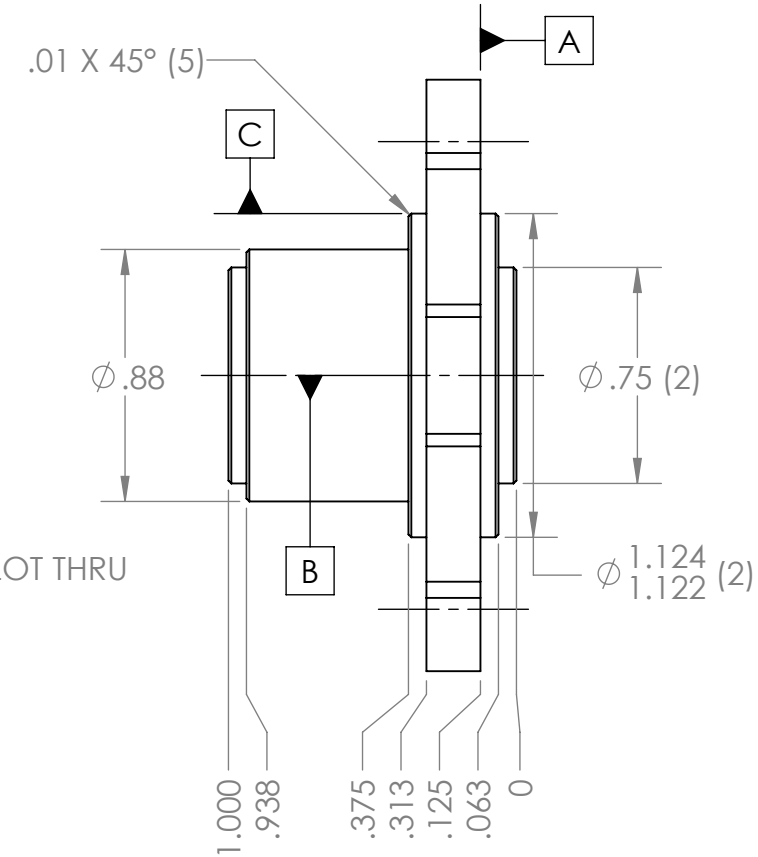

*** SEE CAD FOR ADDITIONAL TOOLPATH INFO***

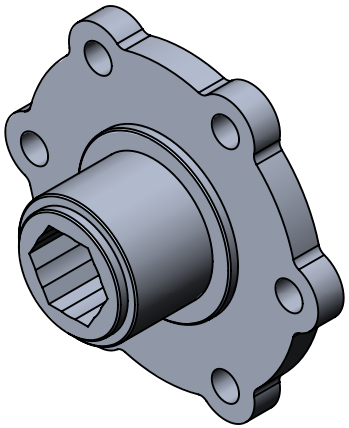

UNLESS OTHERWISE SPECIFIED:	COMMENTS:
DIMENSIONS ARE IN INCHES	DUAL DIMENSIONS ARE IN MILLIMETERS.
TOLERANCES:	BREAK ALL SHARP EDGES.
FRACTIONAL ±1/16	
ANGULAR: MACH ±1°	
ANGULAR: BEND ±5°	
ONE PLACE DECIMAL ±0.1	
TWO PLACE DECIMAL ±0.01	
THREE PLACE DECIMAL ±0.005	
FOUR PLACE DECIMAL ±0.0005	
MATERIAL 7075-T6 OR 6061-T6 ALUMINUM	
FINISH TUMBLED	
DO NOT SCALE DRAWING	

	NAME	DATE
CHECKED	AB	1/13/22
ENG APPR.		
MFG APPR.		
Q.A.		

AndyMark

TITLE:

500IN HEX HUB

SIZE	DWG. NO.	REV
A	am-4124	3

SCALE: 1.5:1 SHEET 1 OF 1

5 4 3 2 1